SONIC

NEXT S9
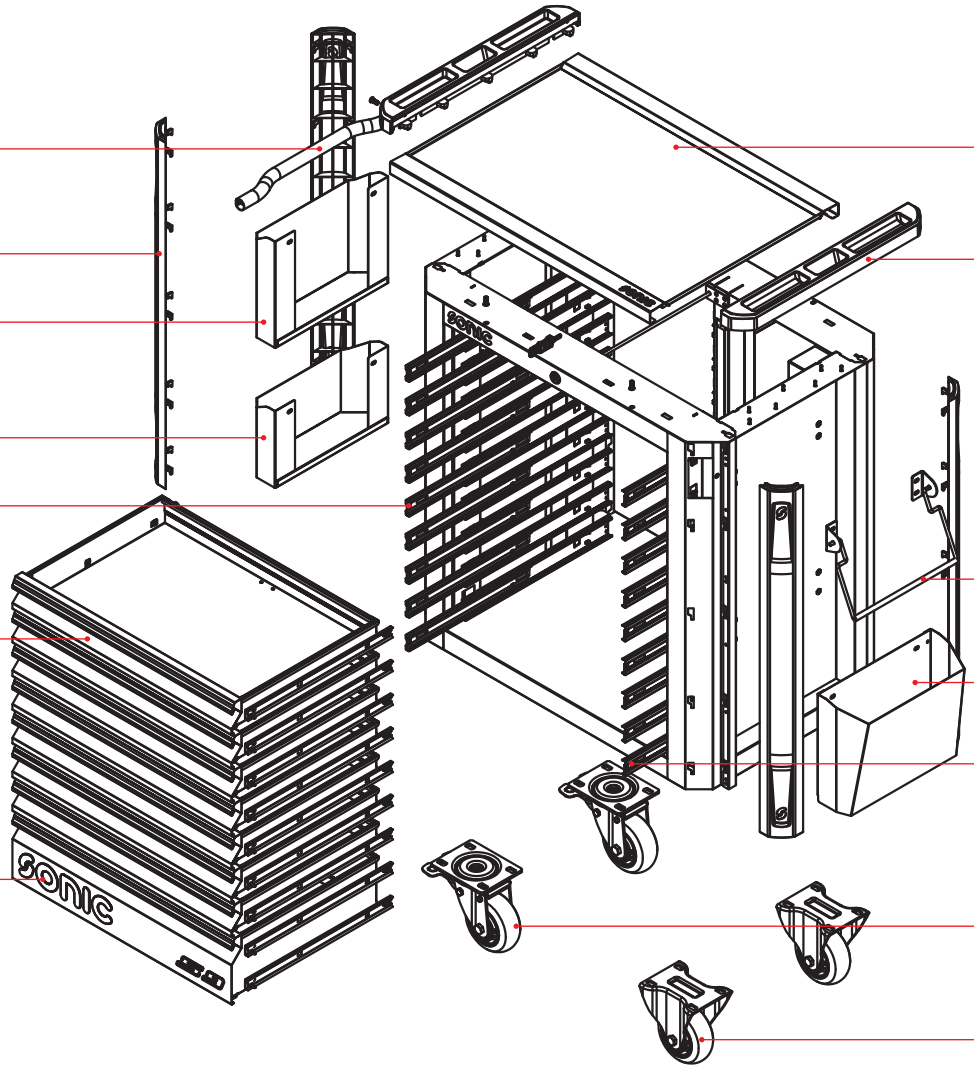
#4737218